Moore Tool®

Precision Machinery and Manufacturing

Moore Jig Grinding Customer Applications

Planetary Gear Housing	LED Mold Plate
Thermoforming Punch	Carbide Insert Tooling
Die Roll	Can Top Tooling
Automotive Production	Camera Phone Lens Mold Plate
Pump Liner (Aerospace)	Formula One Piston Rod
Bottleneck Mold	Razor Blade Punch
Test Cube	CMM Calibration Plate

MOORE TOOLS

the PMT group

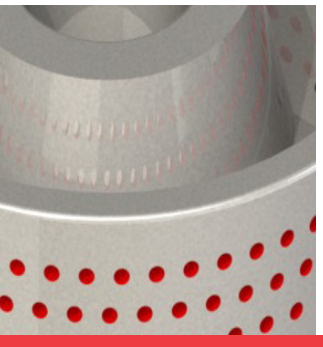
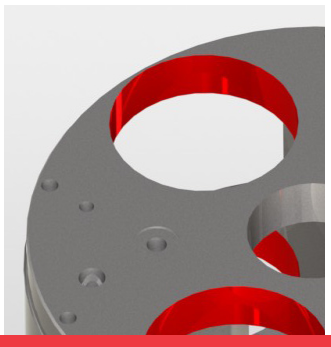
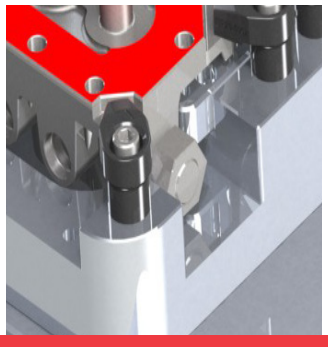
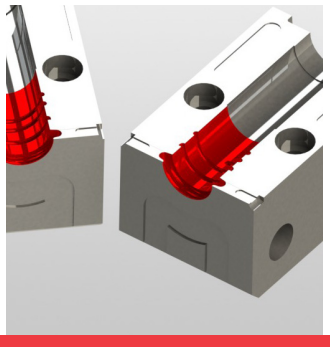
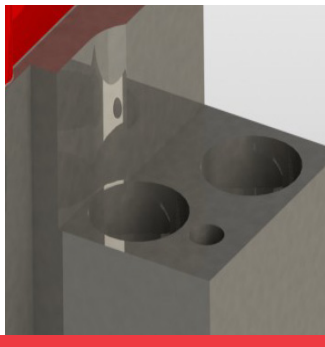

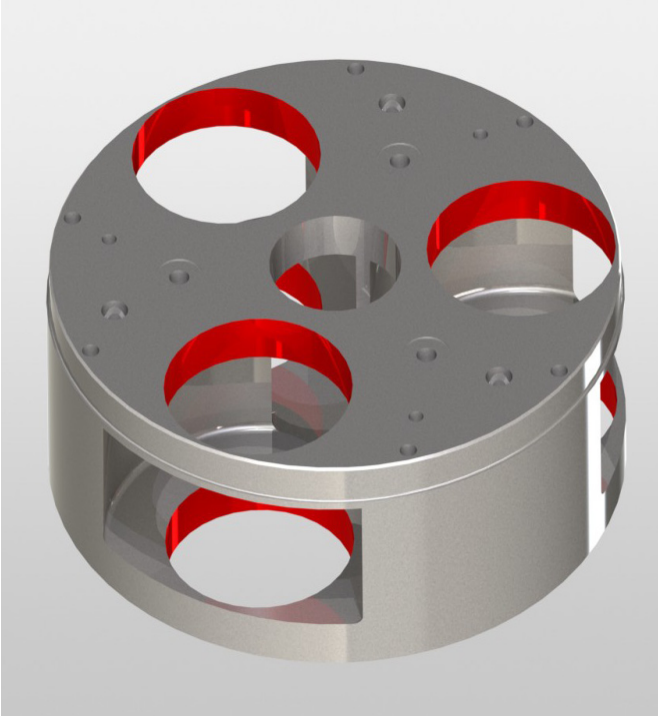

Planetary Gear Housing

Material: AMS 5355 Stainless Steel

Hardness: HRC 29-35

Machine Positioning Accuracy: 2.0 µm

Surface Finish: 0.3 Ra µm

Form Accuracy: 2.0 µm

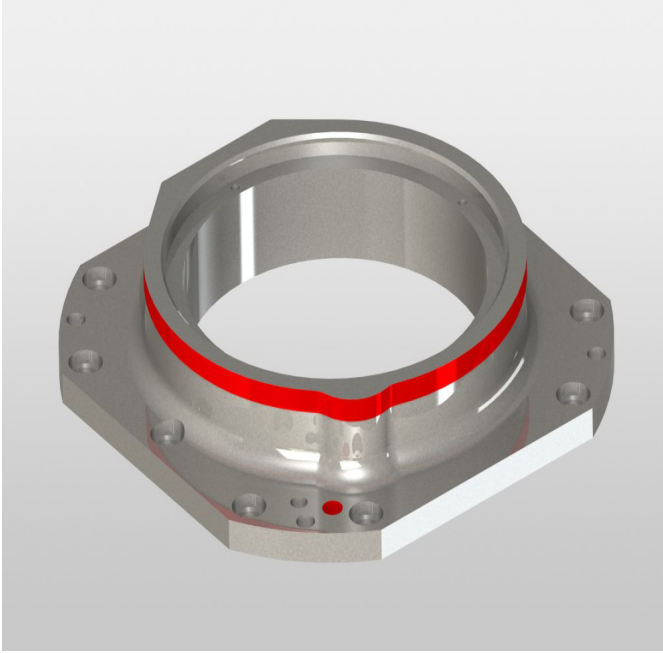

Thermoforming Punch

Material: D2 Tool Steel

Hardness: HRC 60

Machine Positioning Accuracy: 2.0 µm

Surface Finish: 0.3 Ra µm

Form Accuracy: 2.5 µm

Need more Information: **Call:** (203) 366-3224 sales@mooretool.com service@mooretool.com **Visit us on the web:** mooretool.com

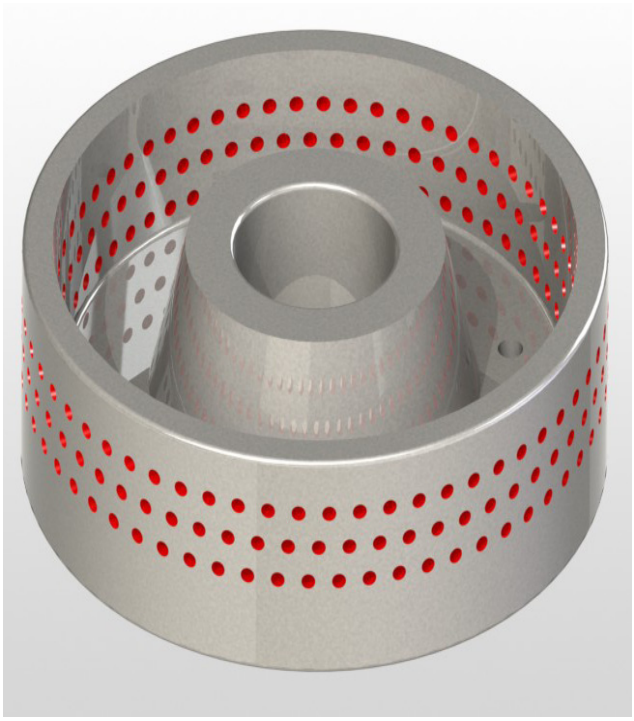

Die Roll

Material: A2 Tool Steel

Hardness: HRC 58-60

Machine Positioning Accuracy: 2.0 µm

Surface Finish: 0.3 Ra µm

Form Accuracy: 3.75 µm

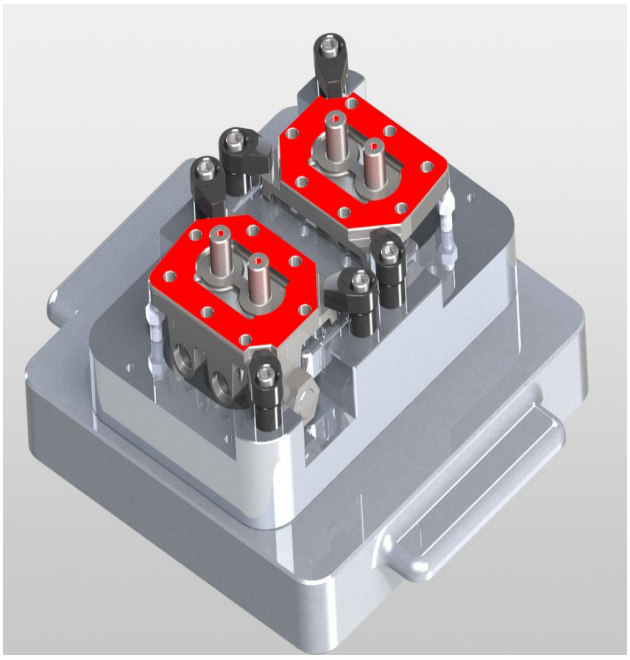

Automotive Production

Material: Proprietary

Hardness: HRC 60

Machine Positioning Accuracy: 2.0 µm

Surface Finish: 0.4 Ra µm

Form Accuracy: 2.0 µm

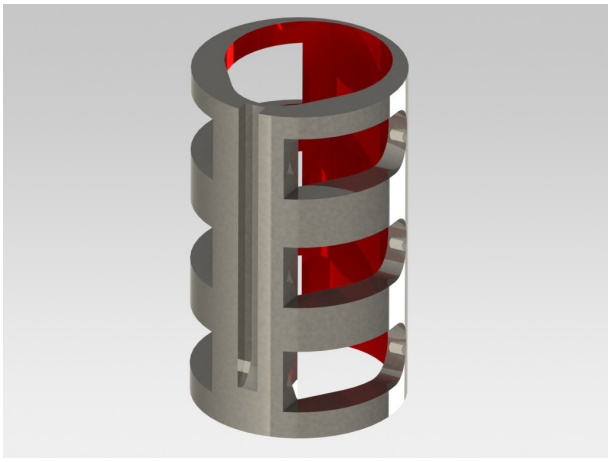

Pump Liner (Aerospace)

Material: Nitralloy

Hardness: HRC 60-62

Surface Finish: 0.1 Ra µm

Form Accuracy: 2.0 µm

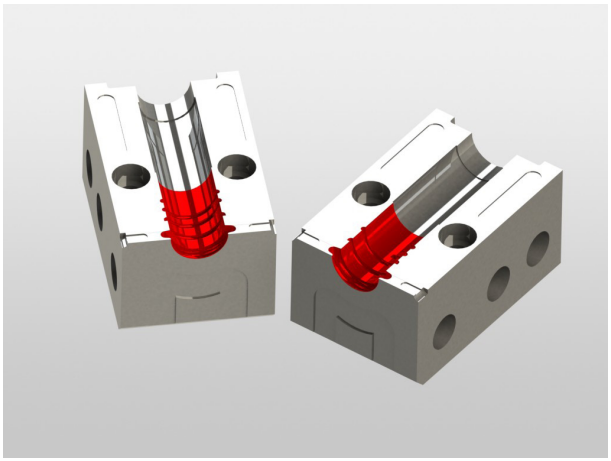

Bottleneck Mold

Material: A2 Tool Steel

Hardness: HRC 56-58

Surface Finish: 0.2 Ra µm

Form Accuracy: 3.0 µm

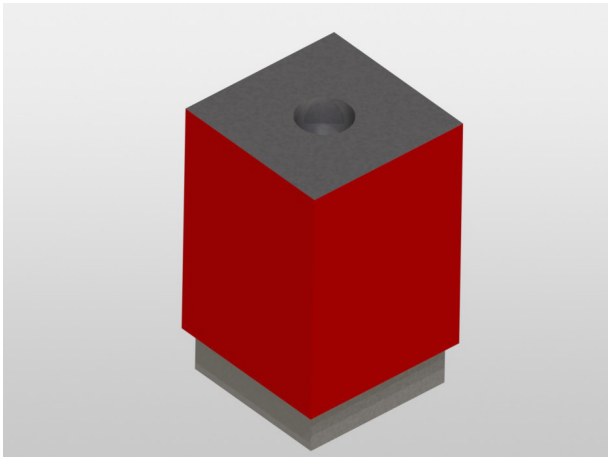

Test Cube 50 mm x 50 mm x 70 mm

Material: A2 Tool Steel

Hardness: HRC 60-62

Surface Finish: 0.1 Ra µm

Form Accuracy:
Vertical Scan X Axis 1.1 µm / Y Axis 0.6 µm
Horizontal Scan X Axis 0.7 µm / Y Axis 1.2 µm

Need more Information: **Call:** (203) 366-3224 sales@mooretool.com service@mooretool.com **Visit us on the web:** mooretool.com

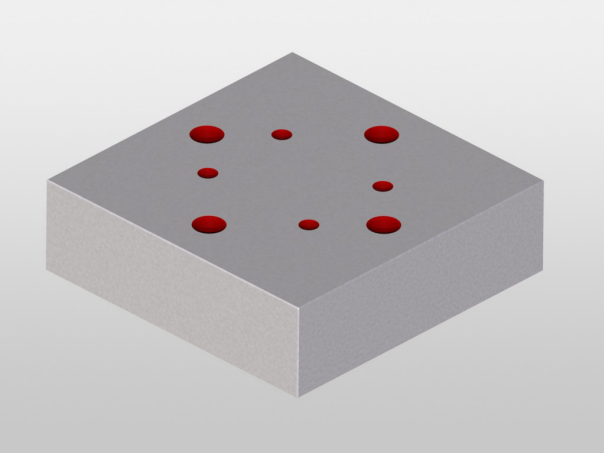

LED Mold Plate

Material: STD11 Tool Steel

Hardness: HRC 55

Machine Positioning Accuracy: 0.5 to 1.0 µm

Surface Finish: 0.1 Ra µm

Form Accuracy: 0.5 to 1.0 µm

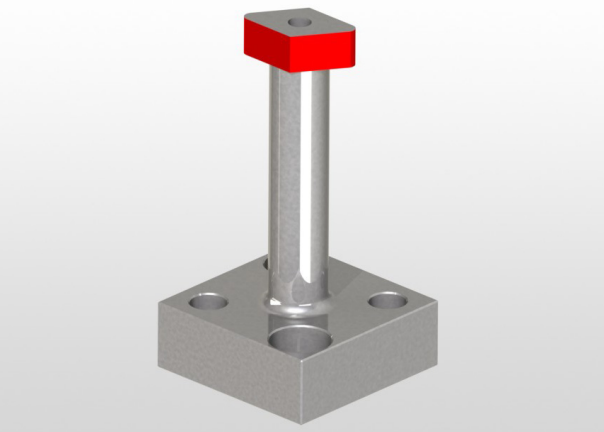

Carbide Insert Tooling

Material: Carbide

Surface Finish: 0.2 Ra µm

Form Accuracy: 2.0 µm

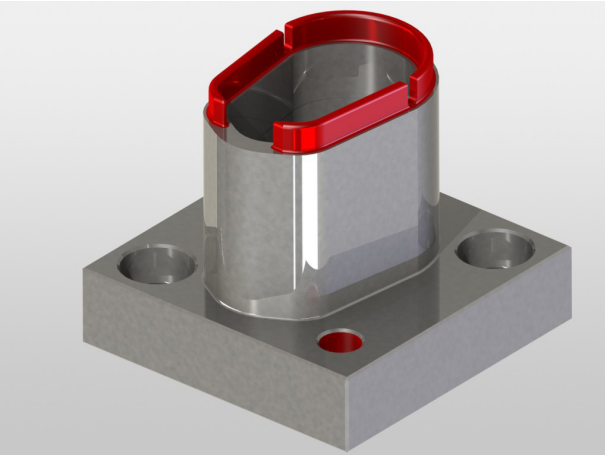

Can Top Tooling

Material: S7 Tool Steel

Hardness: HRC 52-54

Surface Finish: 0.1 Ra µm

Form Accuracy: 2.0 µm

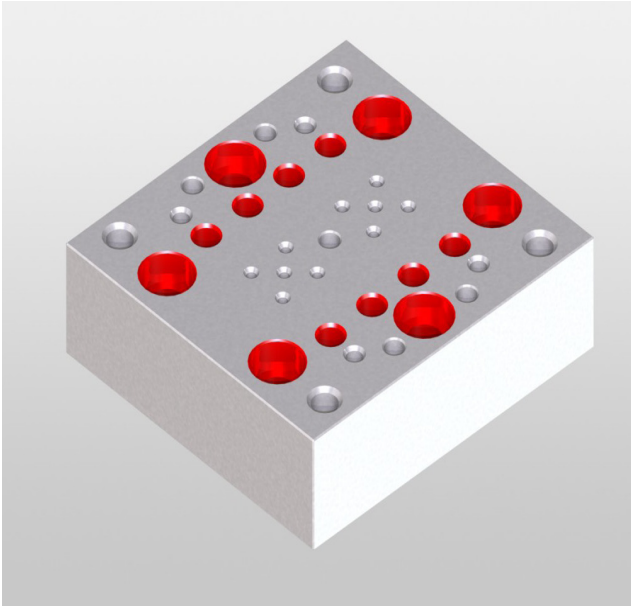

Camera Phone Lens Mold Plate

Material: SLD

Hardness: HRC 58

Machine Positioning Accuracy: 0.5 to 1.0 µm

Surface Finish: <0.2 Ra µm

Form Accuracy: 0.5 µm to 1.0 µm

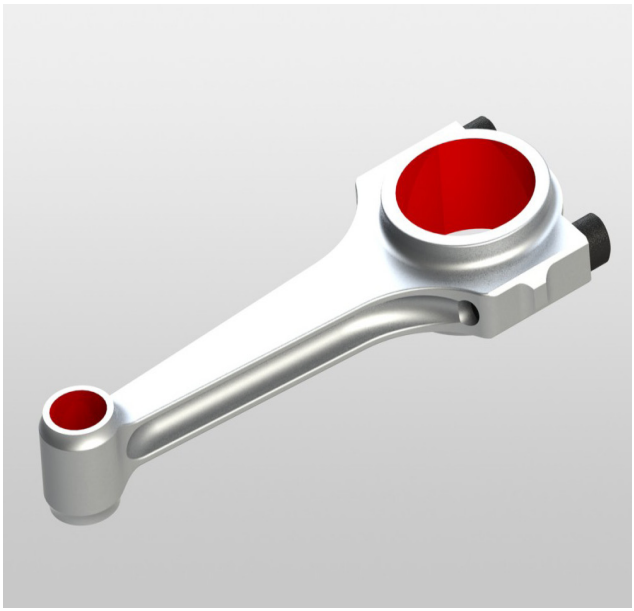

Formula One Piston Rod

Material: 4340 Stainless Steel

Hardness: HRC 40-43

Machine Positioning Accuracy: 1.0 µm

Surface Finish: 0.4 Ra µm

Form Accuracy: 1.0 µm

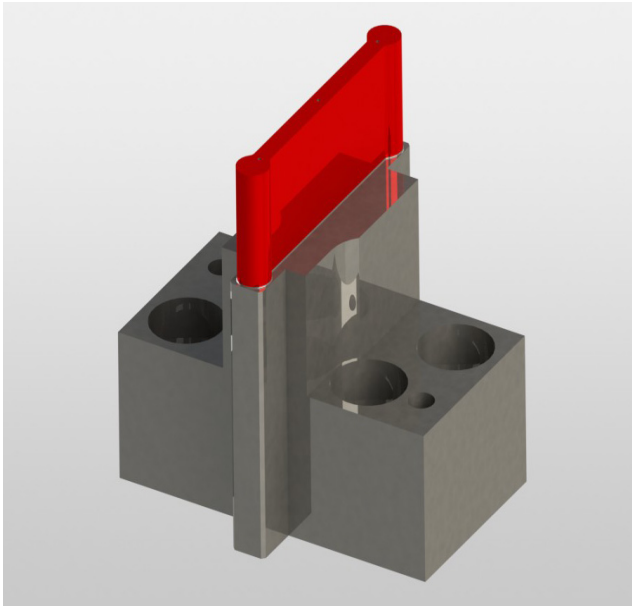

Razor Blade Punch

Material: Carbide

Machine Positioning Accuracy: 1.0 µm

Surface Finish: 0.2 Ra µm

Form Accuracy: 1.0 µm

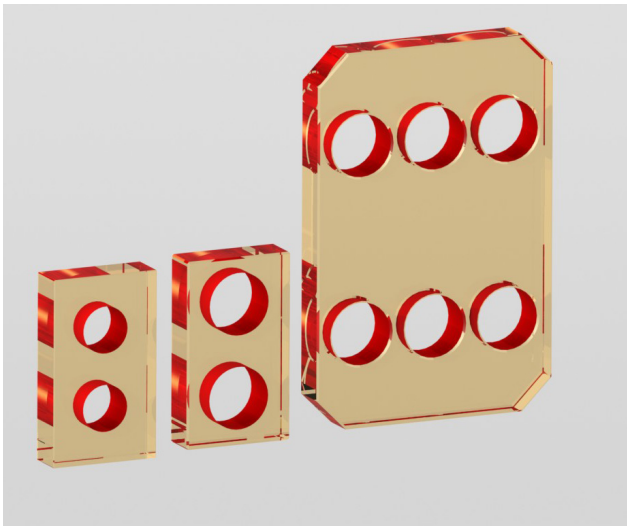

CMM Calibration Plate

Material: Zerodur®

Hardness: HRC 79

Surface Finish: 0.02 Ra µm

Machine Positioning Accuracy: 0.5 to 1.0 µm

Form Accuracy: 1.0 µm

Zerodur® is a registered trademark of Schott Glass Technologies

Building on a Tradition of Excellence

Moore Tool Company offers a complete line of CNC-controlled grinding machine systems and accessories. In addition, the company operates an ultra-precision manufacturing business certified to ISO 9000 and AS 9100 standards with a unique focus on 5-axis milling and ultra-precision jig grinding. The company is ITAR registered. The company operates out of 100,000 SF in Bridgeport, CT, U.S.A. and through Moore Special Tool AG in Zurich Switzerland.

Moore Tool Company, Inc.
800 Union Avenue
Bridgeport, CT 06607-0088
USA

Phone: 203 366 3224
Fax: 203 367 0418
Email: sales@mooretool.com
www.mooretool.com

Moore Special Tool AG
In der Leberzen 25
8902 Urdorf
Switzerland

Phone: +41 (0)56 641 25 85
Email: sales@mooretool.com
www.mooretool.com

Moore Nanotechnology Systems, LLC
230 Old Homestead Highway
Swanzey, NH 03466
USA

Phone: 603 352 3030
Fax: 603 352 3363
Email: sales@nanotechsys.com
www.nanotechsys.com

F-1641 Rev. D